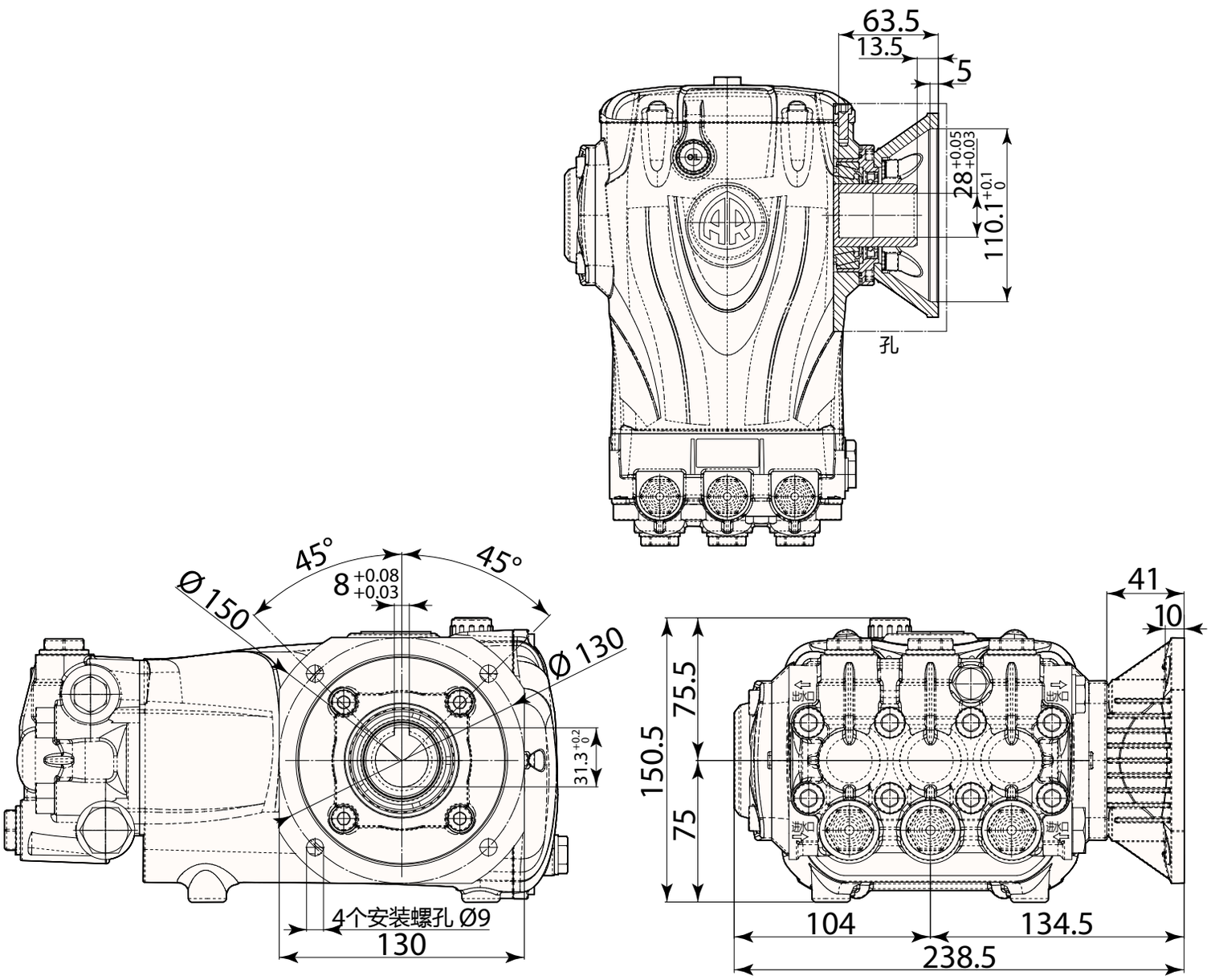
63.5
13.5
5
28 +0.05 +0.03
110.1 +0.1 0
孔
45°
45°
8 +0.08 +0.03
Ø150
Ø130
31.3 +0.2 0
4个安装螺孔 Ø9
130
41
10
75.5
150.5
75
104
134.5
238.5